FEMALE END VIEW

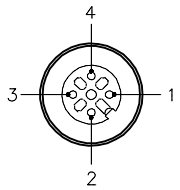

1 = BROWN
2 = WHITE
3 = BLUE
4 = BLACK

euro fast.

LOCKNUT

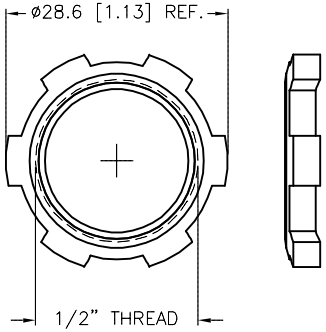

SPECIFICATIONS

CONTACT CARRIER MATERIAL	NYLON OR TPU
CONTACT MATERIAL/PLATING	BRASS/GOLD
HOUSING MATERIAL/PLATING	BRASS/NICKEL
O-RING MATERIAL	NITRILE
RATED CURRENT [A]	4.0 A
RATED VOLTAGE [V]	250 V
CONDUCTOR INSULATION MATERIAL	PVC
NUMBER OF CONDUCTORS [AWG]	4x18 AWG
TEMPERATURE RATING	-40°C to +105°C (-40°F to +221°F)
PROTECTION CLASS	MEETS NEMA 1,3,4,6P AND IEC IP68

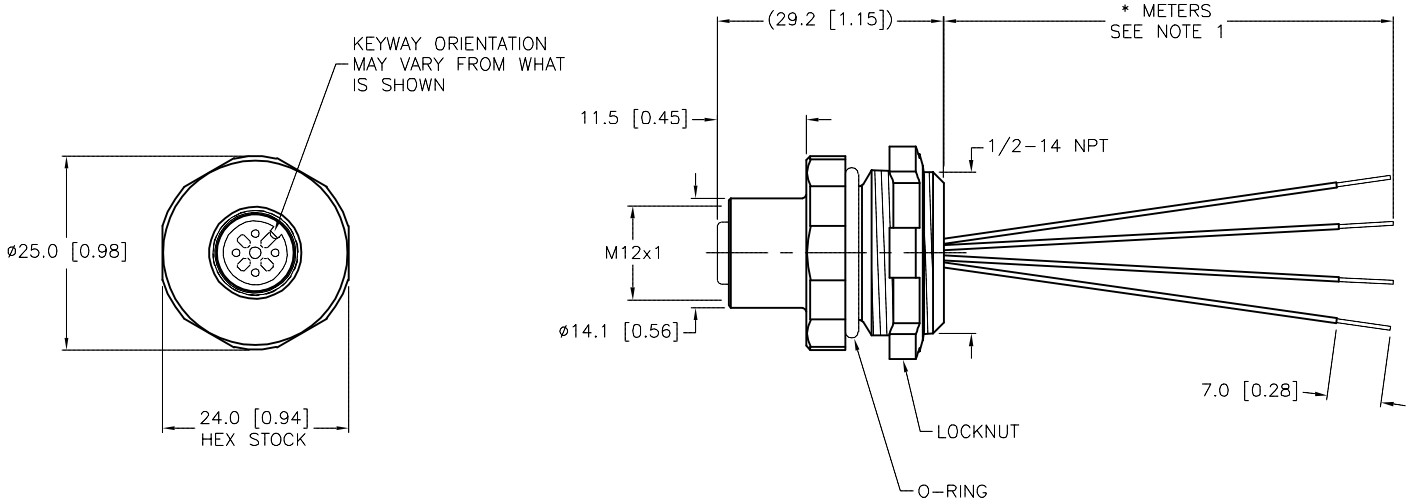

CABLE LENGTH	TOLERANCE*
ALL LENGTHS	+ 4% (OR 50mm) OF LENGTH - 0% (OR 0mm) OF LENGTH WHICHEVER IS GREATER
STRIP LENGTH	**TOLERANCE***
0-7mm	±0.5mm
8-29mm	±1.0mm
30-49mm	±2.0mm
50-69mm	±3.0mm
70-100mm	±4.0mm
OVER 100mm	±5.0mm
*** UNLESS OTHERWISE SPECIFIED**	

SOURCE DRAWING - FOR REFERENCE ONLY

NOTES:

1. "*" INDICATES LEAD LENGTH IN METERS. CONTACT TURCK TO ORDER SPECIFIC LENGTHS.

2. "/S3561" DESIGNATES IEC COLOR CODE. FRONT MOUNT RECEPTACLES TO INCLUDE LOCK NUT AND O-RING.

REV	DESCRIPTION	BY	DATE	ECO NO.
A	DRAWING RELEASE	ER	08/30/19	

RELATED DOCUMENTS
1.
2.
3.
4.

3RD ANGLE PROJECTION

THIS DRAWING IS CONFIDENTIAL AND THE PROPERTY OF TURCK INC. USE OF THIS DOCUMENT WITHOUT WRITTEN PERMISSION IS PROHIBITED.

TURCK

3000 CAMPUS DRIVE
MINNEAPOLIS, MN 55441
1-800-544-7769
(763) 553-7300
(763) 553-0708 fax
www.turck.us

MATERIAL: SEE SPECIFICATIONS

FINISH: SEE SPECIFICATIONS

ALL DIMENSIONS DISPLAYED ON THIS DRAWING ARE FOR REFERENCE ONLY

CONTACT TURCK FOR MORE INFORMATION

DRFT: NF | DATE: 08/22/19
APVD: D.L. | SCALE: 1=1.0

UNIT OF MEASUREMENT
MILLIMETER [INCH]
DO NOT SCALE THIS DRAWING

DESCRIPTION: FK 4.4-*/14.5/NPT/S3561

IDENTIFICATION NO.

REV: A

FILE: 777043653 | SHEET 1 OF 1

Approved 08/23/2019, work order #197703 by D.L.